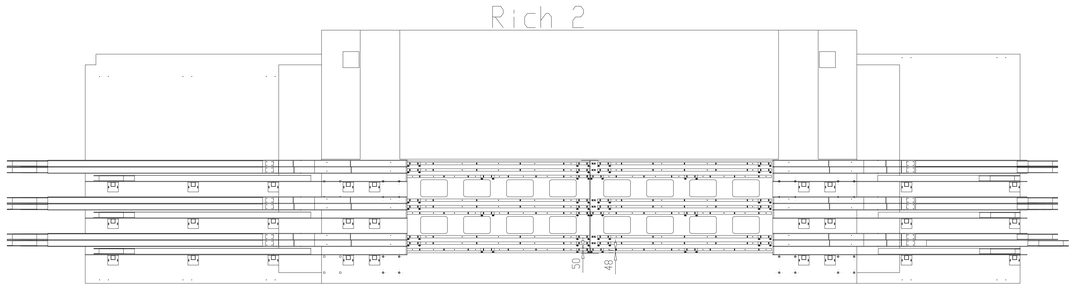

Mon zijde

Magnet

Cryo zijde

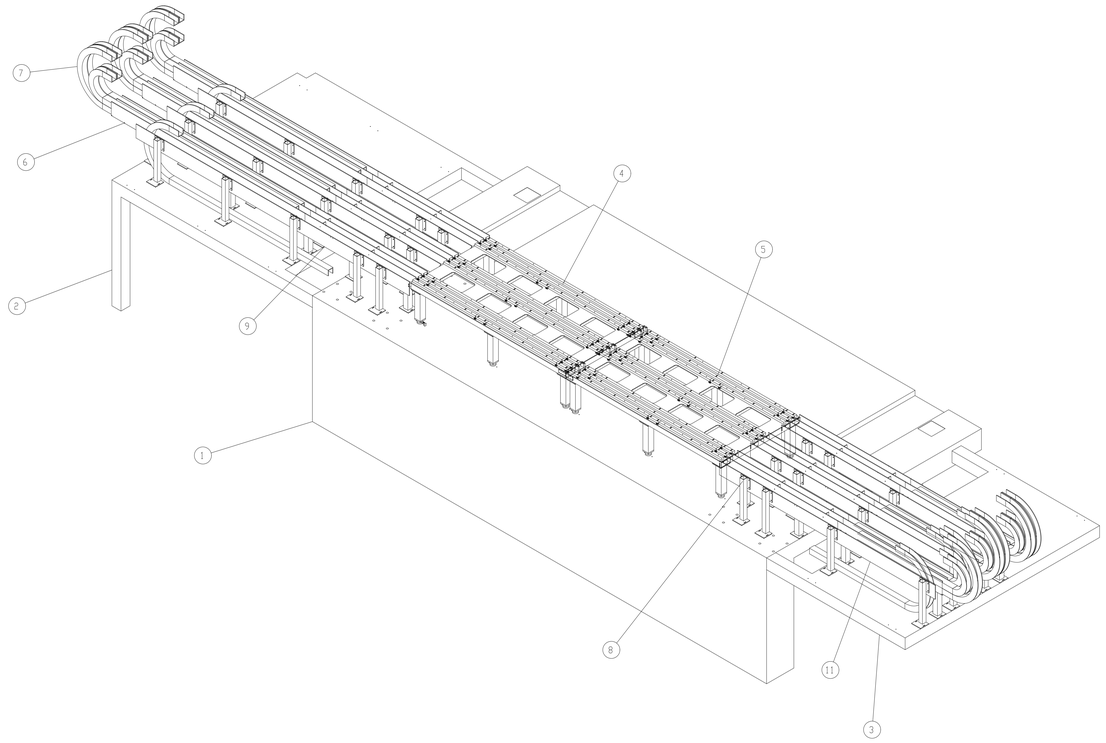

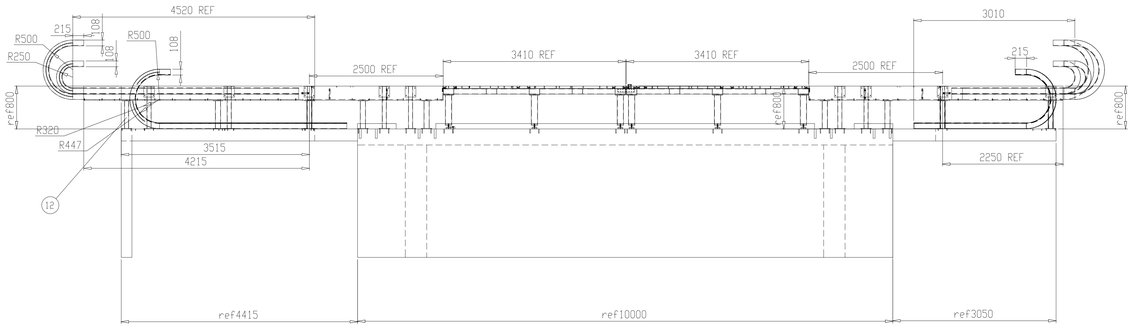

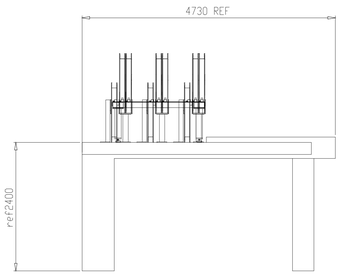

PART NO.	NUMBER	TITLE	MATERIAL	SIZE/NOTE	I. D. NO. /NORM
12	1	assy special poot	Aluminum	Nikhef	LHS-175
11	3	assy buitenbak cryozijde			LHS-150
10	6	Cablechain IT	Aluminum	Lausanne	XX
09	6	assy tussenbak monzijde	Aluminum	Nikhef	LHS-130
08	6	assy tussenbak cryozijde	Aluminum	Nikhef	LHS-140
07	12	Cablechain OT		Nikhef	XX
06	6	assy buitenbak monzijde		Nikhef	LHS-160
05	1	Railtable Cryoside	Aluminum	Nikhef	LHS-110
04	1	Railtable Monside	Aluminum	Nikhef	LHS-120
03	1	Platform Cryoside	Alminum	Cern	
02	1	Platfrom Halliside	Aluminum	Cern	
01	1	Concrete structure	Concreat	Cern	

Project: LHCb Outertracker

Title: Railtable and Cablechain Guidance IT OT

Revision	Date	Name
A	24-01-'06	R Arink
B		
C		
D		

Scale: 1:40

Date: 30-08-'05

Drawn: R. Arink

Checked:

Dim. in mm

CERN LABEL

General tolerances unless otherwise stated according to ISO-2768-mK-E

Geometrical tolerances unless otherwise stated according to ISO-8015-E

Roughness unless otherwise stated according to DIN 1302

NIKHEF

NATIONAL INSTITUTE FOR NUCLEAR PHYSICS AND HIGH ENERGY PHYSICS

P.O.41882,1009 DB Amsterdam,The Netherlands

Size: A0

Identification No.: LHS-100

Sheet No: X Number of sheets: X

This drawing may not be used for commercial purposes without written authorisation.